FUSO – A Daimler Truck Group Brand

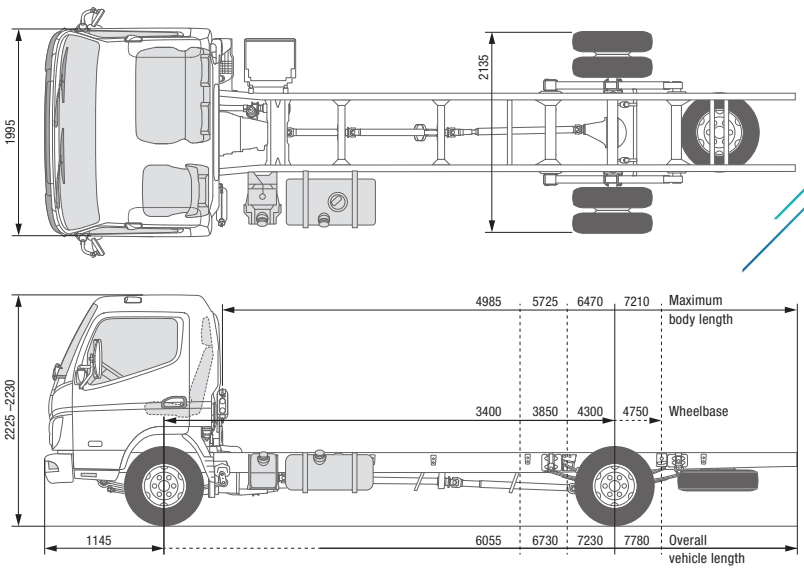

CANTER 9C18 DUONIC® 2.0
LEFT-HAND DRIVE

MODEL / VEHICLE TYPE		9C18			
Cab type / crew		Comfort, single cab / 3			
Model variant		46927512	46927712	46927812	46927915
FUSO model code		FECX1EL3SEUC	FECX1GL3SEUC	FECX1HL3SEUC	FECX1KL3SEUC
DIMENSIONS [MM]					
Wheelbase		3400	3850	4300	4750
Overall length		5940	6690	7190	7740
Cab length		1625			
Width overall		2135			
Cab width		1995			
Height overall		2230		2225	
Track width	Front / rear	1665 / 1670			
Frame height (at end of frame)		845	850	845	
Ground clearance		185			
Cab to rear axle		2875	3325	3775	4225
Cab to end of frame		4345	5020	5520	6070
Maximum body length**		4985	5725	6470	7210
Frame width		850			
Front overhang		1145			
Rear overhang		1395	1695	1745	1845
Front axle to front of body		625			
Recommended distance cab to body		100			
WEIGHTS [KG]					
Empty weight*		2615	2645	2680	2700
	Front* / rear*	1730 / 885	1710 / 935	1740 / 940	1760 / 940
Gross vehicle weight / gross combination weight		8550 / 12050			
Axle loads*	Front / rear	3100 / 5800			
Towed weight	Braked / unbraked	3500 / 750			
Chassis load bearing capacity*		5935	5905	5870	5850
CALCULATED OUTPUT					
Maximum speed	km/h	129			
Minimum turning circle [m]	Kerb to kerb	12.2	13.8	15.2	16.6
	Wall to wall	13.8	15.2	16.6	18.0

* The weight refers to the base vehicle (European series, including coolant, oil, 90% fuel, tyre sealant, tools and driver with 75 kg) without optional equipment. If any optional equipment is added, the weight changes accordingly. ** Calculated maximum value which should be checked depending on the body and application.
Subject to change without notice. All data is approximate. The illustrations may contain accessories and items of optional equipment which are not part of the standard specification. The data sheet may contain product types and support services not available in certain countries.

FUSO – A Daimler Truck Group Brand

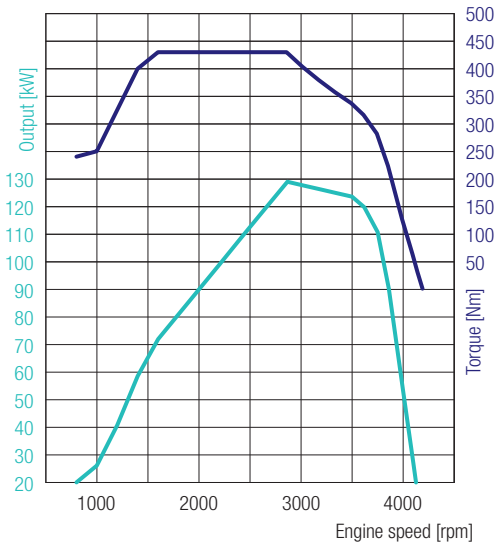

CANTER 9C18 DUONIC® 2.0
LEFT-HAND DRIVE

4P10 – 129 kW (175 PS)
430 Nm@1600 rpm
129 kW@2865 rpm

ENGINE (EURO VI)				
Type		Water-cooled four-stroke diesel engine with turbocharger, intercooler and direct injection		
No. of cylinders		4/in-line		
Capacity		2998 cm³		
Peak output		129 kW (175 hp) / 2865 rpm		
Rated torque		430 Nm / 1600 rpm		
Diesel particulate filter		Service life approx. 300,000 km		
Alternator		Alternating current 12 V, 140 A		
Exhaust gas aftertreatment		SCR + DPF		
PTO (optional)	Type	31 kW with flange	62 kW with flange	31 kW for directly connected pumps
	Torque at peak output [Nm]:	196 Nm	392 Nm	196 Nm
	Gear ratios	1:0.655	1:0.727	1:0.651
	Engine speed at peak output	1500 rpm		
POWERTRAIN				
Transmission	Model	DUONIC® 2.0: Automated transmission with dual clutch, 6 forward speeds and 1 reverse gear		
	Gear ratio	5.397 / 3.788 / 2.310 / 1.474 / 1.000 / 0.701 / reverse 5.397		
Rear axle gear ratio	Ratio	5.714		
CHASSIS				
Front axle / rear axle	Model	F350T / R035T		
	Load-bearing capacity front/rear	3100 kg / 5800 kg		
Tyres		205/75R17.5C 124/122M		
		Twin tyres at rear, tyres with optimised rolling resistance		
Wheel		17.5 x 6.00 - 127 - 6 wheel bolts		
Steering		Left-hand drive		
		Recirculating-ball steering with power assist, tilting telescopic steering column with steering-wheel lock		
Brake	Service brake	Hydraulic with vacuum power assist, dual-circuit with load-dependent brake proportioning valve at rear wheels		
	Front / rear	Disc brake (252 × 40)		
	Parking brake	Mechanical expanding brake on drive shaft at rear of transmission		
	Auxiliary brake	Exhaust brake (50 kW)		
Suspension	Front / rear	Semi-elliptic leaf spring with shock absorber and stabiliser		
Frame	Type	Ladder-type frame with reinforcements and crossmembers		
Fuel tank capacity		100 litres		
Electrical system	Batteries	12 V (100 Ah - 760 A(EN))		

FUSO – A Daimler Truck Group Brand

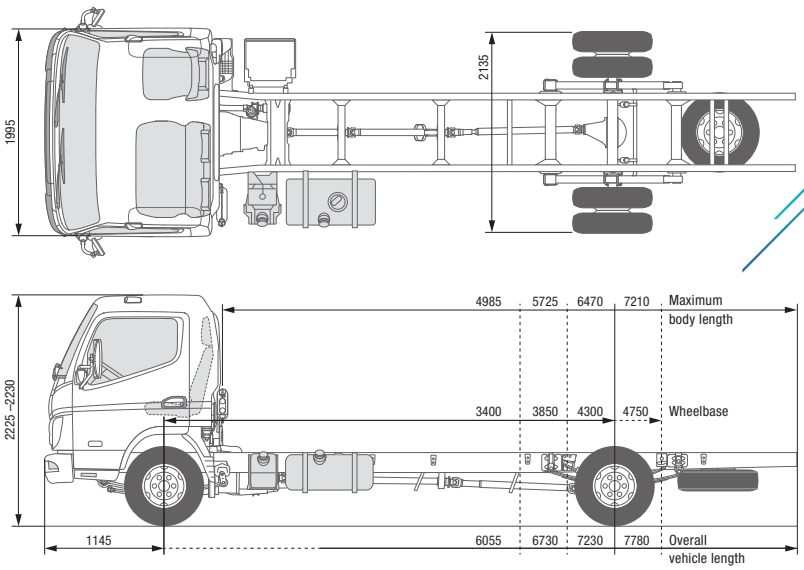

CANTER 9C18 DUONIC® 2.0
RIGHT-HAND DRIVE

MODEL / VEHICLE TYPE		9C18			
Cab type / crew		Comfort, single cab / 3			
Model variant		46927522	46927722	46927822	46927925
FUSO model code		FECX1ER3SEUC	FECX1GR3SEUC	FECX1HR3SEUC	FECX1KR3SEUC
DIMENSIONS [MM]					
Wheelbase		3400	3850	4300	4750
Overall length		5940	6690	7190	7740
Cab length		1625			
Width overall		2135			
Cab width		1995			
Height overall		2230		2225	
Track width	Front / rear	1665 / 1670			
Frame height (at end of frame)		845	850	845	
Ground clearance		185			
Cab to rear axle		2875	3325	3775	4225
Cab to end of frame		4345	5020	5520	6070
Maximum body length**		4985	5725	6470	7210
Frame width		850			
Front overhang		1145			
Rear overhang		1395	1695	1745	1845
Front axle to front of body		625			
Recommended distance cab to body		100			
WEIGHTS [KG]					
Empty weight*		2615	2645	2680	2700
	Front* / rear*	1730 / 885	1710 / 935	1740 / 940	1760 / 940
Gross vehicle weight / gross combination weight		8550 / 12050			
Axle loads*	Front / rear	3100 / 5800			
Towed weight	Braked / unbraked	3500 / 750			
Chassis load bearing capacity*		5935	5905	5870	5850
CALCULATED OUTPUT					
Maximum speed	km/h	129			
Minimum turning circle [m]	Kerb to kerb	12.2	13.8	15.2	16.6
	Wall to wall	13.8	15.2	16.6	18.0

* The weight refers to the base vehicle (European series, including coolant, oil, 90% fuel, tyre sealant, tools and driver with 75 kg) without optional equipment. If any optional equipment is added, the weight changes accordingly. ** Calculated maximum value which should be checked depending on the body and application.
Subject to change without notice. All data is approximate. The illustrations may contain accessories and items of optional equipment which are not part of the standard specification. The data sheet may contain product types and support services not available in certain countries.

FUSO – A Daimler Truck Group Brand

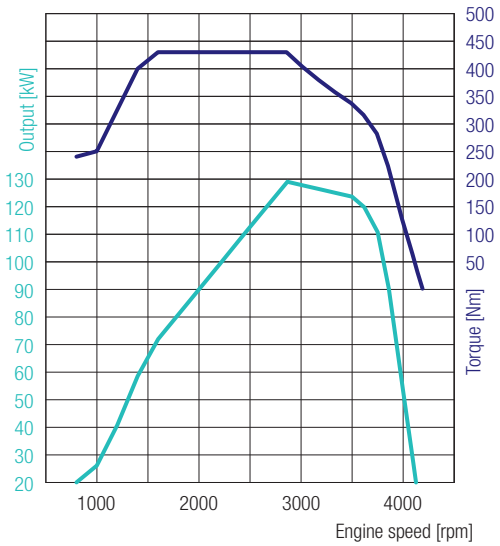

CANTER 9C18 DUONIC® 2.0
RIGHT-HAND DRIVE

4P10 – 129 kW (175 PS)
430 Nm@1600 rpm
129 kW@2865 rpm

ENGINE (EURO VI)				
Type		Water-cooled four-stroke diesel engine with turbocharger, intercooler and direct injection		
No. of cylinders		4/in-line		
Capacity		2998 cm³		
Peak output		129 kW (175 hp) / 2865 rpm		
Rated torque		430 Nm / 1600 rpm		
Diesel particulate filter		Service life approx. 300,000 km		
Alternator		Alternating current 12 V, 140 A		
Exhaust gas aftertreatment		SCR + DPF		
PTO (optional)	Type	31 kW with flange	62 kW with flange	31 kW for directly connected pumps
	Torque at peak output [Nm]:	196 Nm	392 Nm	196 Nm
	Gear ratios	1:0.655	1:0.727	1:0.651
	Engine speed at peak output	1500 rpm		
POWERTRAIN				
Transmission	Model	DUONIC® 2.0: Automated transmission with dual clutch, 6 forward speeds and 1 reverse gear		
	Gear ratio	5.397 / 3.788 / 2.310 / 1.474 / 1.000 / 0.701 / reverse 5.397		
Rear axle gear ratio	Ratio	5.714		
CHASSIS				
Front axle / rear axle	Model	F350T / R035T		
	Load-bearing capacity front/rear	3100 kg / 5800 kg		
Tyres		205/75R17.5C 124/122M		
		Twin tyres at rear, tyres with optimised rolling resistance		
Wheel		17.5 x 6.00 - 127 - 6 wheel bolts		
Steering		Right-hand drive		
		Recirculating-ball steering with power assist, tilting telescopic steering column with steering-wheel lock		
Brake	Service brake	Hydraulic with vacuum power assist, dual-circuit with load-dependent brake proportioning valve at rear wheels		
	Front / rear	Disc brake (252 × 40)		
	Parking brake	Mechanical expanding brake on drive shaft at rear of transmission		
	Auxiliary brake	Exhaust brake (50 kW)		
Suspension	Front / rear	Semi-elliptic leaf spring with shock absorber and stabiliser		
Frame	Type	Ladder-type frame with reinforcements and crossmembers		
Fuel tank capacity		100 litres		
Electrical system	Batteries	12 V (100 Ah - 760 A(EN))		